GS-6501HV

Digital Brushless Servo

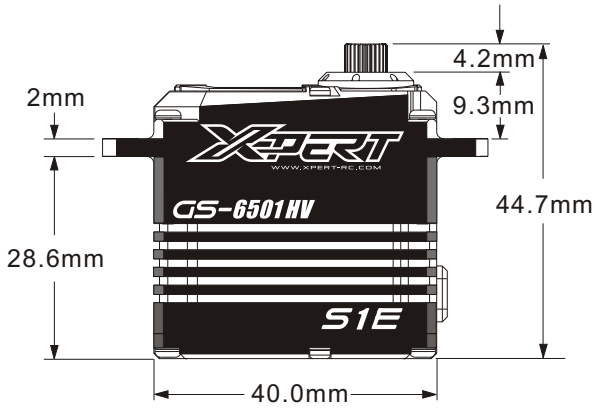

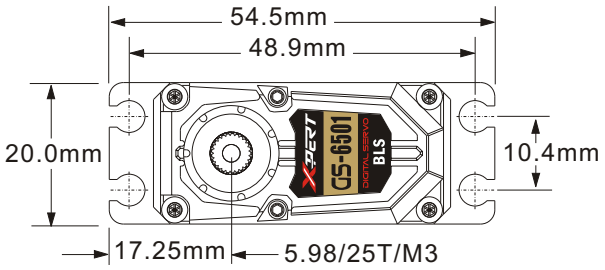

Input voltage :5V~8.4V DC
Maximum current : 6.5~7A
Frequency Range: 50~1000HZ (auto adaptive)
PPM Range : 250us-500us,500us-1000us,
1000u-2000us(auto adaptive)
Dimensions :40.0mm*20.0mm*44.3mm
Weight:71/g (without wires)

S1E Speed :45°/60°
6.0V:0.095/0.139 sec
7.4V:0.089/0.115 sec
8.4V:0.083/0.113 sec

S1E Torque
6.0V:25.2kg/cm/350 oz-in.
7.4V:28.4kg/cm/394 oz-in.
8.4V:30.0kg/cm/417 oz-in.

Available cables:

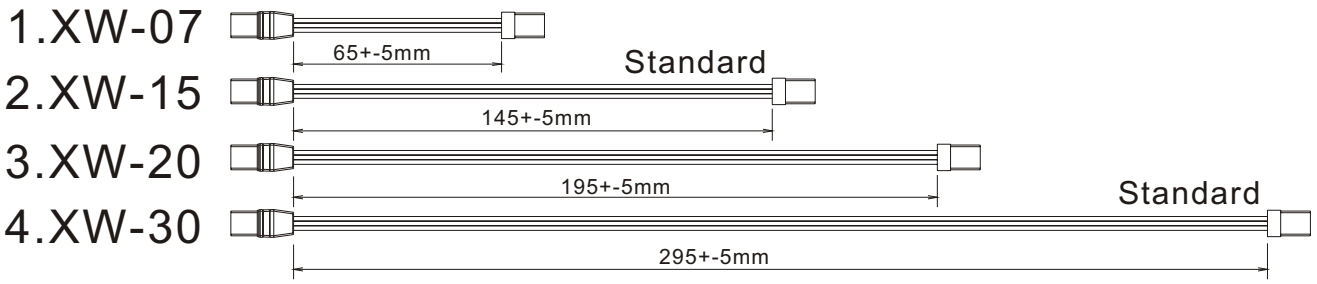

#1/2/3 are included with the servo, #4 is an optional.

Gear set: XGS-S232

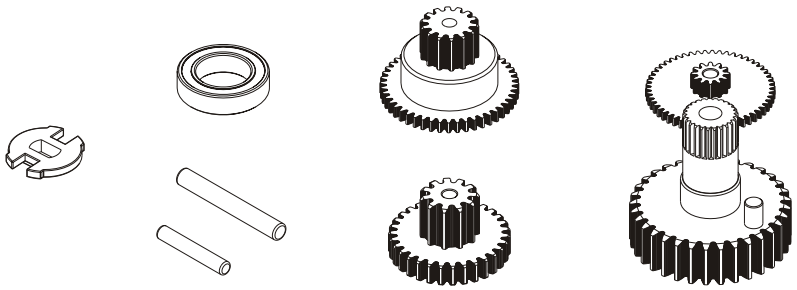

Note:

1. This servo does not support alkaline or dry cell type battery.
2. This servo must be installed with the included rubber grommets to absorb the vibrations and to increase the lifespan of the product.
3. This servo has a water resistance structure. However, it is not waterproof. It can damage the servo if it is submerged in water.
4. This servo has over temperature and over current protection. The operating temperature can go as high as 70°C/158°F under loading.
5. It can cause permanent damage by reverse polarity power. It is not covered by the limited factory warranty.
6. This servo supports most high-speed protocols on the market. The transmitter must have all channels at its neutral position when the servo is power on. Otherwise, the servo can have incorrect initialization and malfunction.